WOOD FOUNDATION PLAN

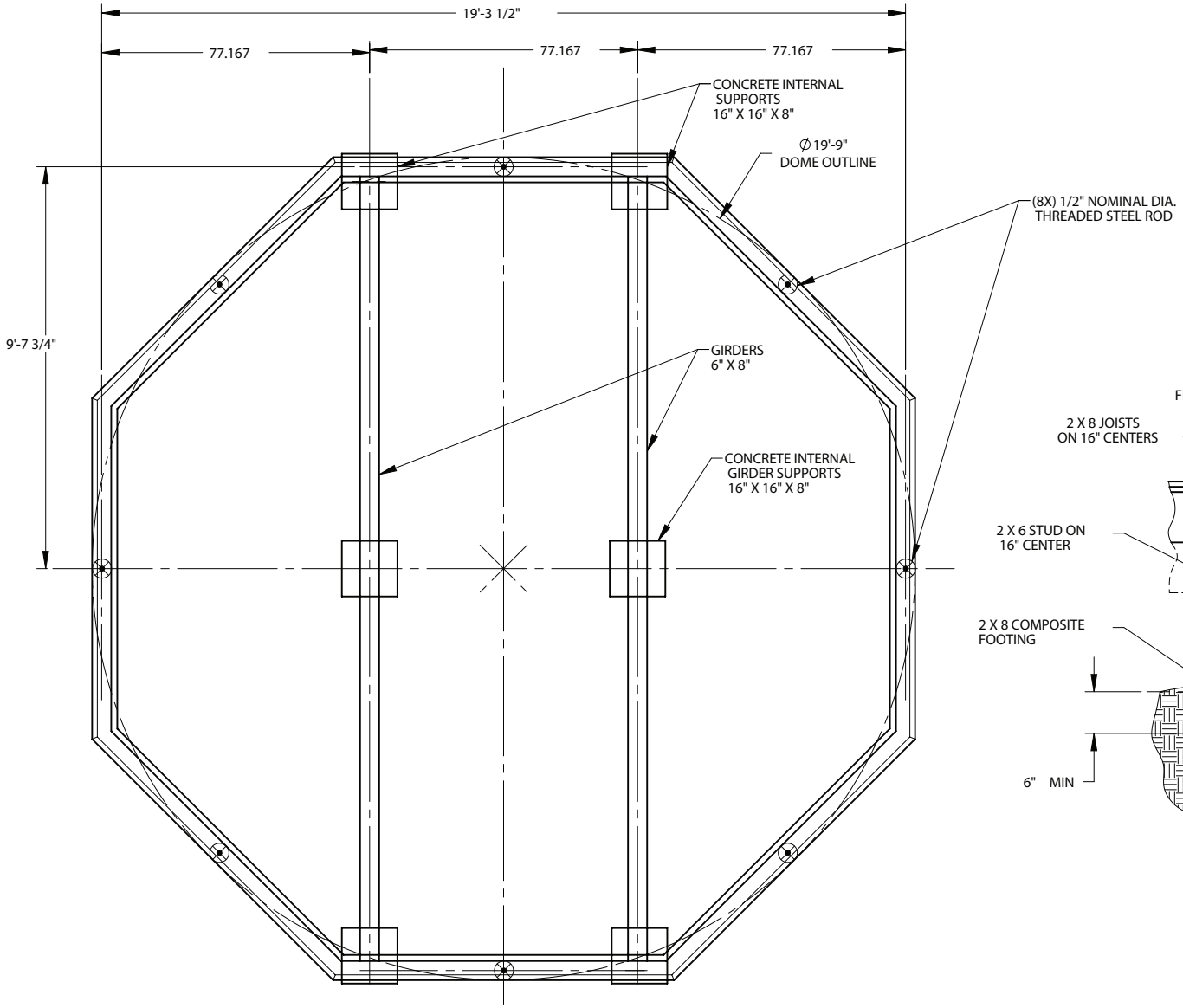

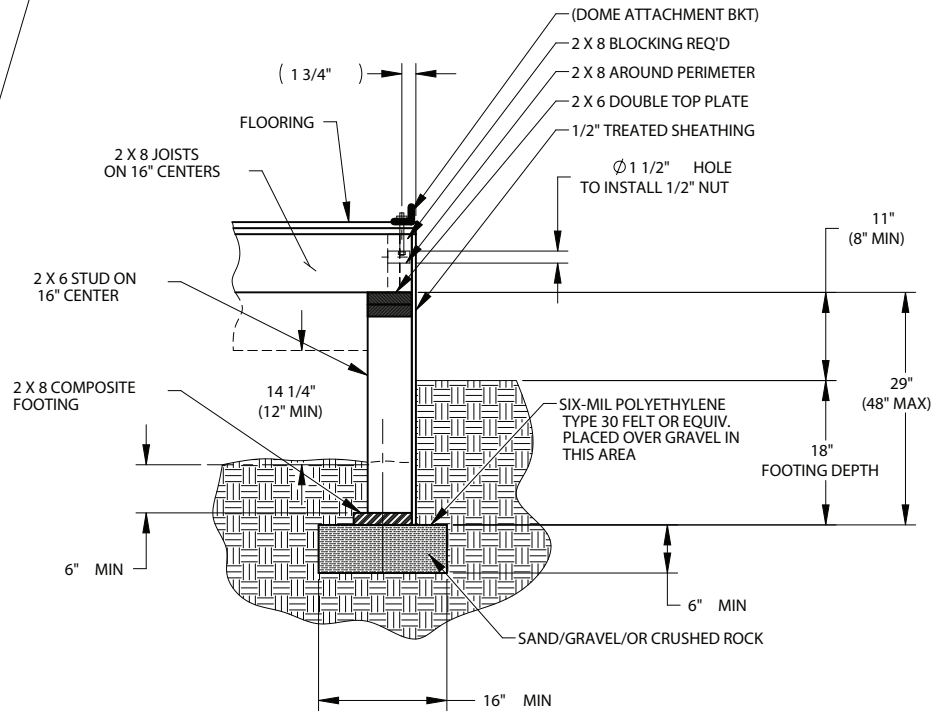

INTERSHELTER™
We shelter the world